JAVATRON

Software Engineering Project Documentation

CS4800-003 — Team 1

1. Player Connects & Matchmaking

- Player inputs server IP and port then clicks connect
- Client initiates TCP connection to server
- The server receives the connection and transmits S_WELCOME.
- The client transmits C_HELLO (name + color)
- Client initiates C_FIND_MATCH request
- Server places player in matchmaking queue.
- Server transmits S_LOBBY_STATUS (pending state)
- The second player enters and submits a match request.
- LobbyManager removes both players from the queue.
- Server establishes MatchRoom (game session thread)
- Server transmits S_MATCH_FOUND to each player
- Server transmits S_MATCH_START
- Both clients transition from the lobby to the game interface.

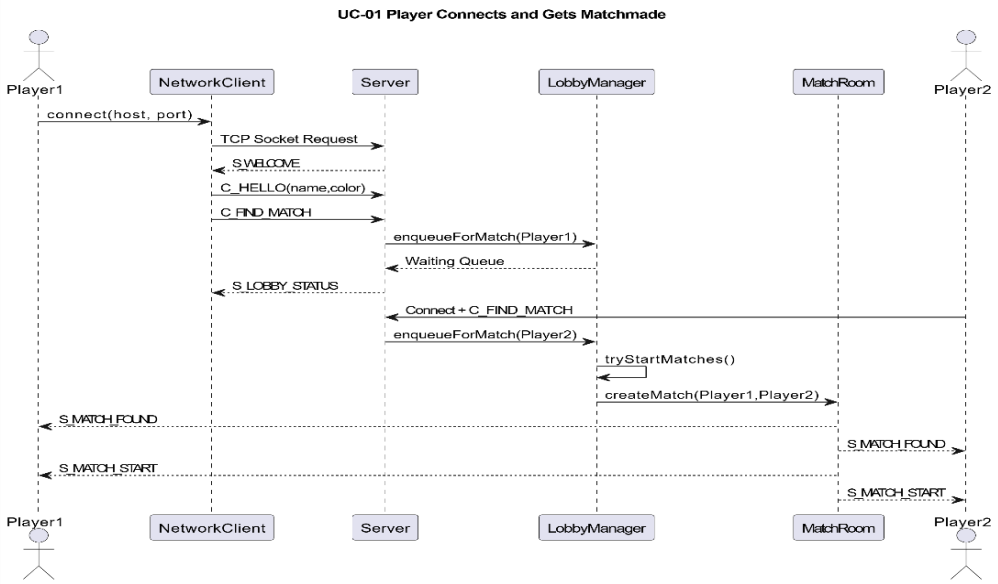

2. Full Gameplay Round

- Server transmits countdown (3 → 2 → 1 → START)
- Participants submit C_TURN commands (directions)
- Server executes game loop at 60 ticks per second
- Inputs are gathered and utilized every tick.
- Server calculates the upcoming moves for both players at the same time.
- Server verifies collisions through TrailGrid
- If there's no collision → adjust positions and paths
- The server transmits S_SNAPSHOT (game state) to each player.
- Loop persists through each tick
- If a collision happens → figure out outcome
- Server refreshes score
- Server reinitializes round status.
- Server transmits S_ROUND_END (victor + points)

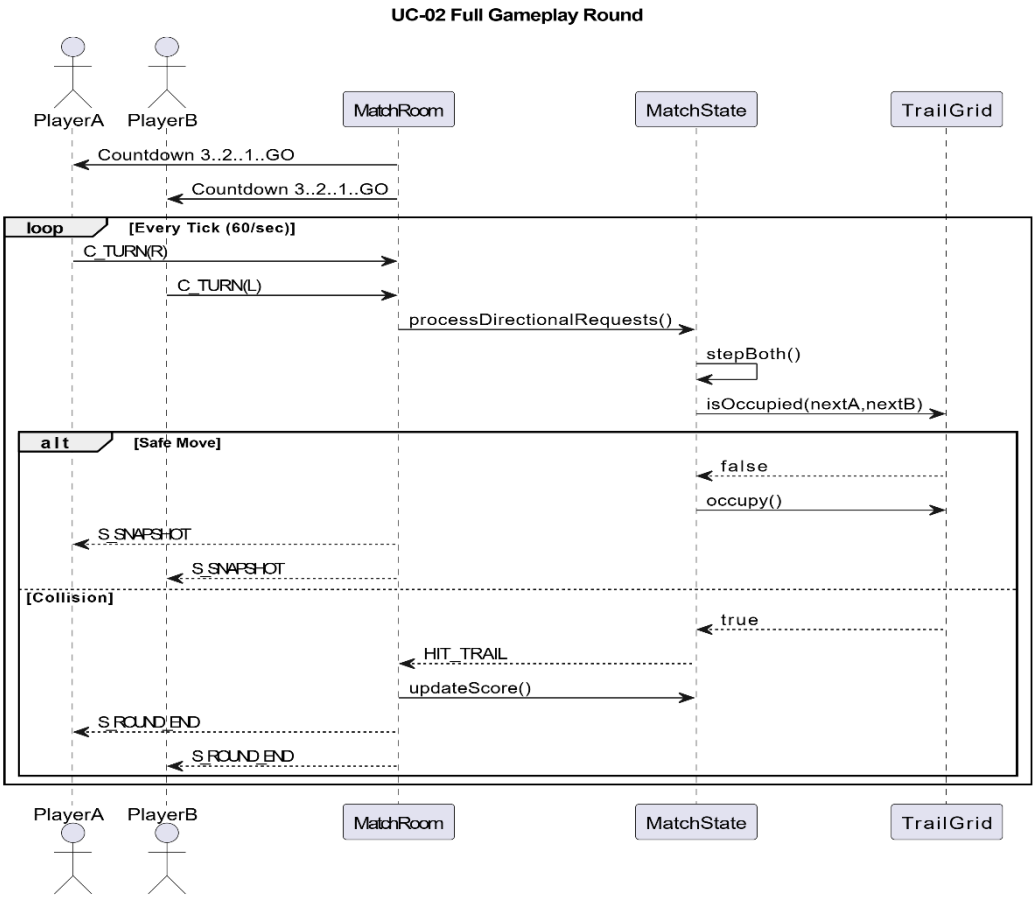

3. **Player Disconnect Mid-Game**
   - Player abruptly exits the game (no disconnection message)
   - Server heartbeat identifies absent reply
   - Server identifies player session as disconnected
   - MatchRoom identifies disconnection
   - Server announces the other player as the winner (forfeit)
   - Database matches server updates for results
   - Server halts game loop / sound
   - Server transmits S_MATCH_END to the other player
   - Server transmits S_RETURN_TO_LOBBY
   - Server eliminates session of disconnected player

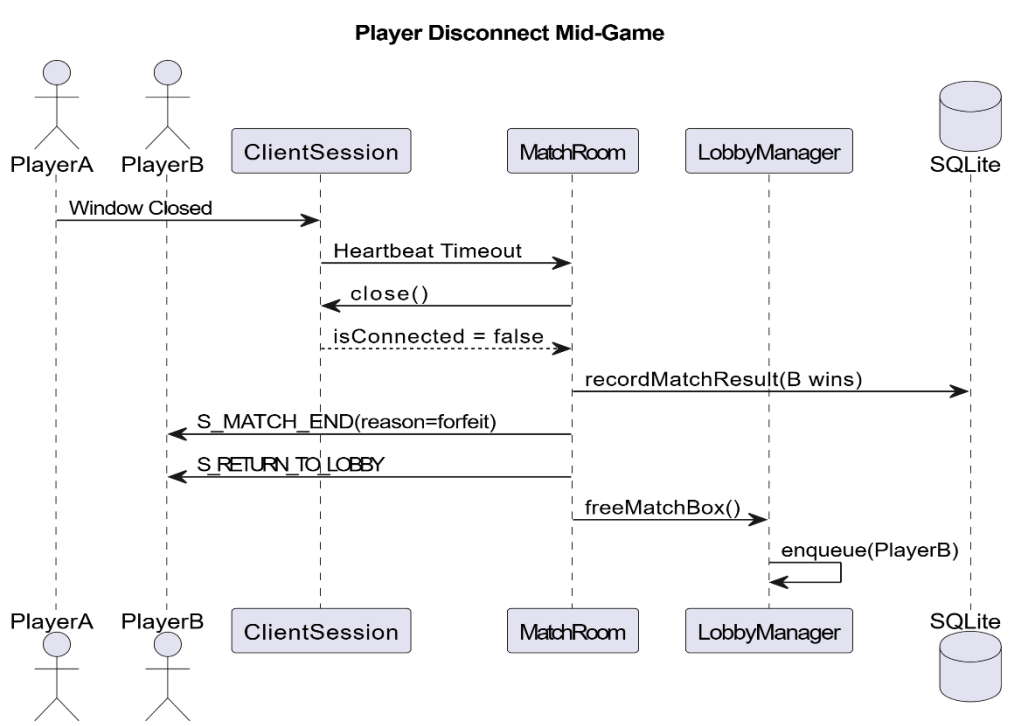

4. Rematch Vote Flow (Workflow)
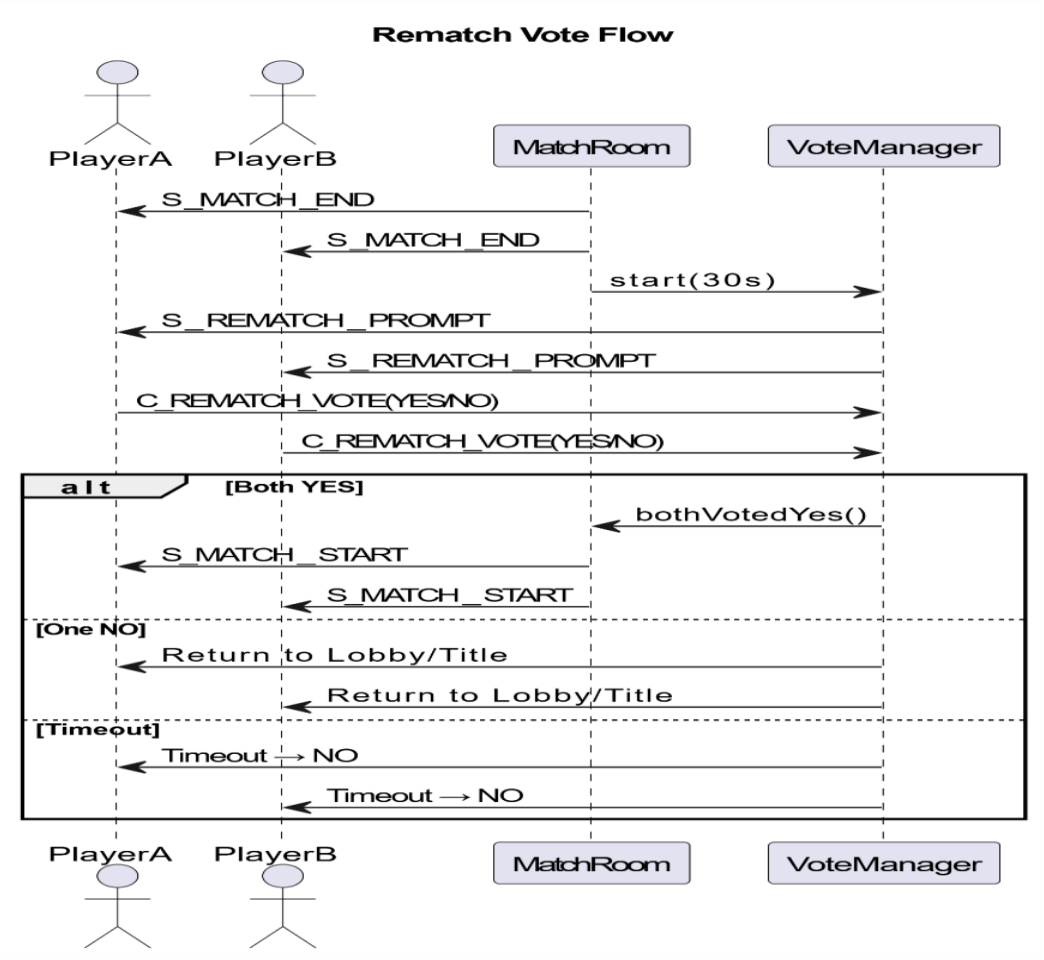
- After the match concludes, the server transmits S_MATCH_END.
- Server initiates a 30-second voting countdown
- The server transmits S_REMATCH_PROMPT to each player.
- Participants select YES or NO
- Participants submit C_REMATCH_VOTE
- Server gathers both votes
- Decision paths:
    - If both are YES → initiate new match (S_MATCH_START)
    - If a single NO → NO player leaves, the YES player goes back to the lobby.
    - If neither option is selected → both return to title screen
    - If timeout occurs → considered as NO → go back to lobby.